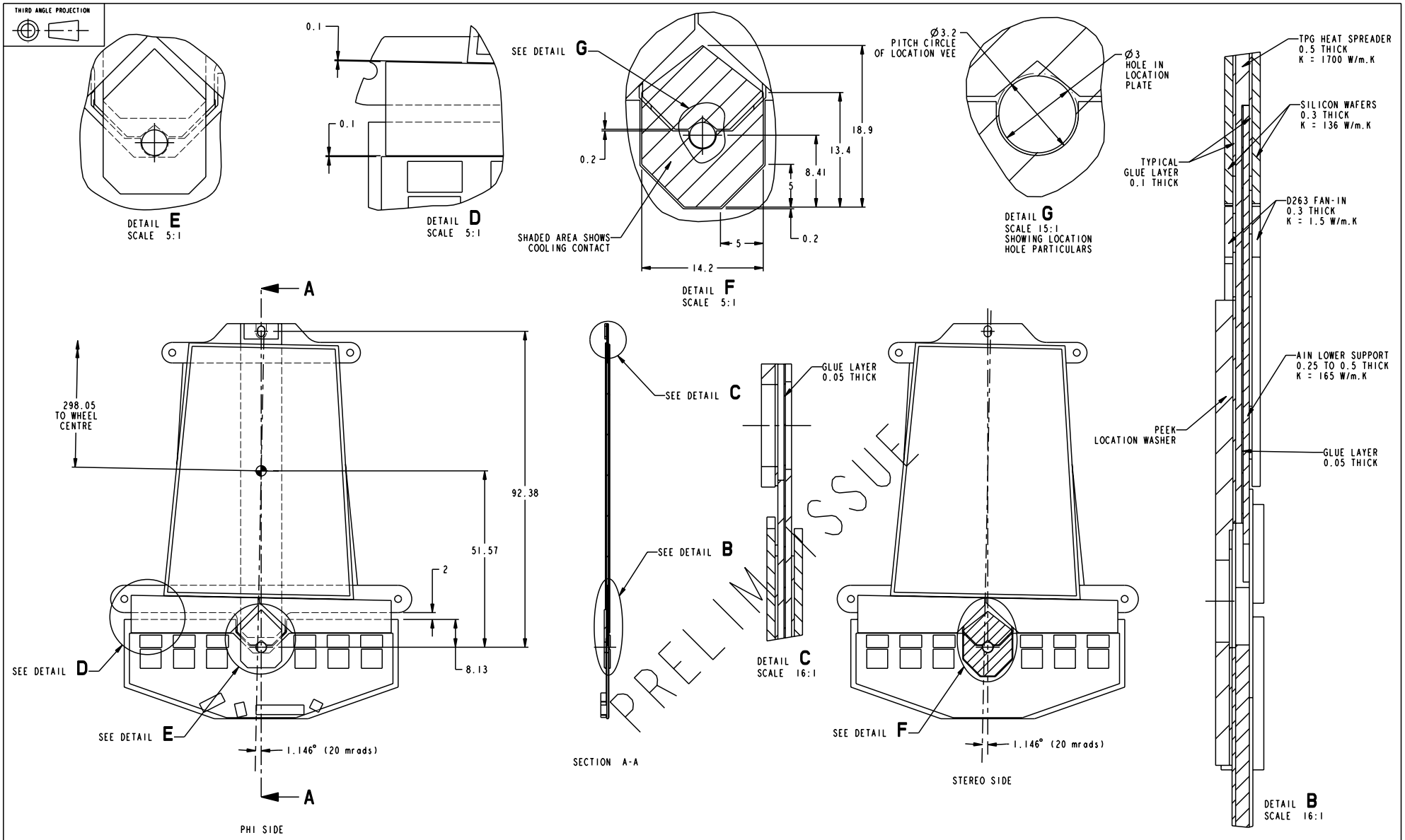

DETAIL OF INNER MODULE
40 OFF PER RING
F -1 & F -0 PROTOTYPE MODULES ONLY

ISSUE	DATE	NAME	DESCRIPTION
D	1-Nov-99	P.SUTCLIFFE	F -0 MODULES ADDED SILICON CHANGED 1AB SOR 512 3/8/99 SLOT IN TPG ADDED LOCATION PLATE SIMPLIFIED
C	30-Oct-98	P.SUTCLIFFE	FAN-IN MODIFIED IN ACCORDANCE WITH SPEC.
B	27-Oct-98	P.SUTCLIFFE	HYBRID CHANGED IN LINE WITH ELECTRONIC DESIGN. LOCATION VEE CLARIFIED
A	25-Sep-98	P.SUTCLIFFE	FIRST ISSUE

MODIFICATIONS

UNLESS OTHERWISE SPECIFIED:-	METRIC SCREW THREADS TO BS3643 CLASS 6H/6g	DRAWING PRACTICE AND TOLERANCE INTERPRETATION TO BS308	WELDING SYMBOLS TO BS 499
ALL DIMENSIONS IN MILLIMETRES	TOLERANCES UNLESS OTHERWISE SPECIFIED	MATERIAL: SEE CHART	DRAWN: P.SUTCLIFFE
SURFACE TEXTURE VALUES IN MICROMETRES	MACHINED DIM: ±	SPEC: SEE PARTS	DATE: 25-Sep-98
SURFACE TEXTURE TO BE ✓	ANGULAR ±	TREATMENT: SEE PARTS	CHECKED: P.SUTCLIFFE
MACHINE ALL OVER OR WHERE MARKED ✓		FINISH: SEE PARTS	APPROVED: P.SUTCLIFFE
REMOVE BURRS AND BREAK SHARP EDGES	DO NOT SCALE		

THE UNIVERSITY OF LIVERPOOL
DEPARTMENT OF PHYSICS

PROJECT: ATLAS FORWARD TRACKER

TITLE: INNER MODULE, BeO/AlN/TPG VERS.

DRAWING NUMBER: NP27-03-121

ARRGT. DRAWING: NP27-03-90

SHEET 1 OF 3 SHEETS SCALE:-2:1 A1

THIRD ANGLE PROJECTION

ITEM	PART/CAD No	DWG TITLE	MATERIAL	MAT SPEC	REMARK	QTY
1	NP27-03-116	HYBRID BASE ASSEMBLY - TPG/BeO	SEE PARTS	SEE PARTS	-	1
2	NP27-03-121-01	INNER SILICON WAFERS	SILICON	-	0.3mm THICK	2
3	NP27-03-121-02	STEREO/PHI FAN-IN	BOROSILICATE GLASS	D263	0.3mm THICK	2
4	NP27-03-121-03	LOWER SUPPORT	AIN	-	0.5mm THICK	1
5	NP27-03-121-04	UPPER SUPPORT	AIN	-	0.5mm THICK	1
6	NP27-03-121-05	LOCATION PAD-OUTER MODULE	PEEK	-	-	1
7	NP27-03-121-07	OUTER LOCATOR	PEEK	-	0.5mm THICK	1
8	NP27-03-121-08	SUPPORT CRUCIFIX	TPG	SEE NOTE	0.5mm THICK	1
9	NP27-03-121-GLUE	GLUE LAYERS	?	?	0.1 mm OR 0.05mm THICK	1

TPG (THERMAL PYROLYTIC GRAPHITE) TO BE
MOSAIC SPREAD 5 TO 10% (1700 W/m.k)
COAT WITH 0.02 POLYIMIDE AFTER SHAPE HAS BEEN CUT.

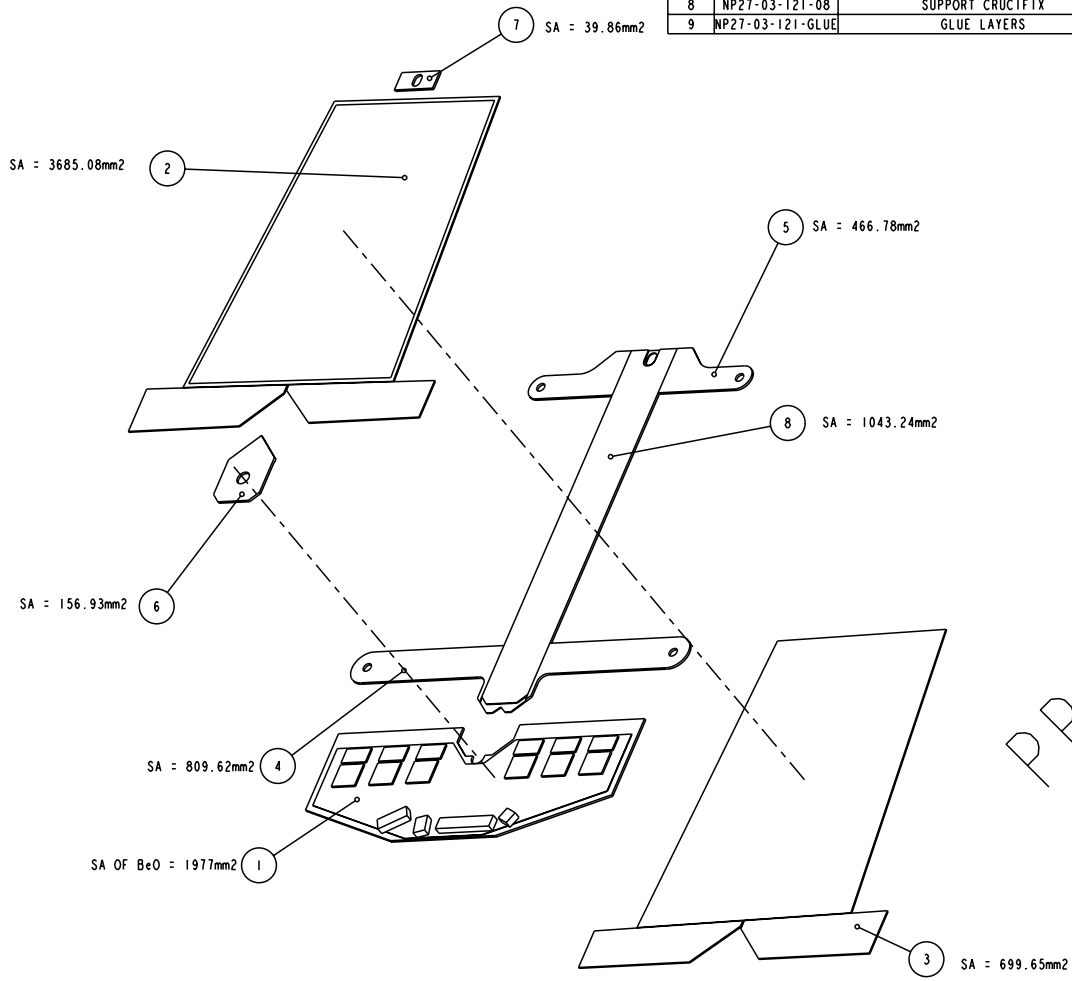

PRELIM ISSUE

ISSUE	DATE	NAME	DESCRIPTION
D	1-Nov-99	P.SUTCLIFFE	F -0 MODULES ADDED SILICON CHANGED IAW OMM W12 3/8/99 SLOT IN TPG ADDED LOCATION PLATE SIMPLIFIED
C	30-Oct-98	P.SUTCLIFFE	FAN-IN MODIFIED IN ACCORDANCE WITH SPEC.
B	27-Oct-98	P.SUTCLIFFE	HYBRID CHANGED IN LINE WITH ELECTRONIC DESIGN. LOCATION VEE CLARIFIED
A	25-Sep-98	P.SUTCLIFFE	FIRST ISSUE

MODIFICATIONS

UNLESS OTHERWISE SPECIFIED:-
ALL DIMENSIONS IN MILLIMETRES
SURFACE TEXTURE VALUES IN MICROMETRES
SURFACE TEXTURE TO BE [ ] ✓
MACHINE ALL OVER OR WHERE MARKED ✓

REMOVE BURRS AND BREAK SHARP EDGES

METRIC SCREW THREADS TO BS3643 CLASS 6H/6g

TOLERANCES UNLESS OTHERWISE SPECIFIED [ ]
MACHINED DIMS. ±
ANGULAR ±

DO NOT SCALE

DRAWING PRACTICE AND TOLERANCE INTERPRETATION TO BS308

MATERIAL	SEE CHART
SPEC	SEE PARTS
TREATMENT	SEE PARTS
FINISH	SEE PARTS

WELDING SYMBOLS TO BS 499

DRAWN	P.SUTCLIFFE
DATE	25-Sep-98
CHECKED	P.SUTCLIFFE
APPROVED	P.SUTCLIFFE

THE UNIVERSITY OF LIVERPOOL
DEPARTMENT OF PHYSICS

PROJECT: ATLAS FORWARD TRACKER

TITLE: INNER MODULE, BeO/AIN/TPG VERS.

DRAWING NUMBER: NP27-03-121

ARRGT. DRAWING: NP27-03-90

SHEET 2 OF 3 SHEETS SCALE:-2:1 A1

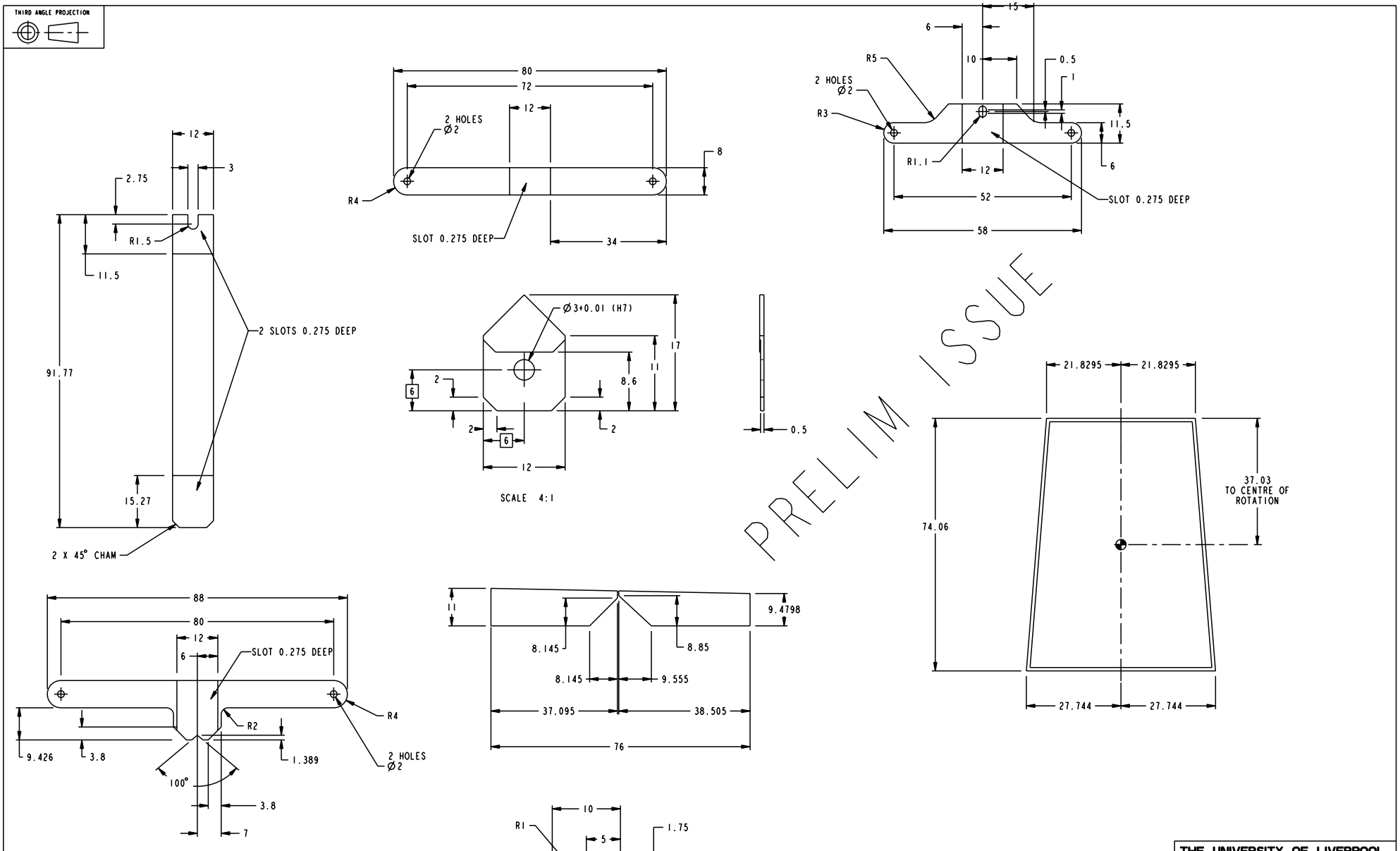

ISSUE	DATE	NAME	DESCRIPTION
D	1-Nov-99	P.SUTCLIFFE	F -0 MODULES ADDED SILICON CHANGED 1AW OHM W12 3/8/99 SLOT IN TPG ADDED LOCATION PLATE SIMPLIFIED
C	30-Oct-98	P.SUTCLIFFE	FAN-IN MODIFIED IN ACCORDANCE WITH SPEC.
B	27-Oct-98	P.SUTCLIFFE	HYBRID CHANGED IN LINE WITH ELECTRONIC DESIGN. LOCATION VEE CLARIFIED
A	25-Sep-98	P.SUTCLIFFE	FIRST ISSUE

MODIFICATIONS

UNLESS OTHERWISE SPECIFIED:-
ALL DIMENSIONS IN MILLIMETRES
SURFACE TEXTURE VALUES IN MICROMETRES
SURFACE TEXTURE TO BE
MACHINE ALL OVER OR WHERE MARKED
REMOVE BURRS AND BREAK SHARP EDGES

METRIC SCREW THREADS TO BS3643 CLASS 6H/6g
TOLERANCES UNLESS OTHERWISE SPECIFIED
MACHINED DIMS. ±
ANGULAR ±
DO NOT SCALE

DRAWING PRACTICE AND TOLERANCE INTERPRETATION TO BS308

MATERIAL	SEE CHART
SPEC	SEE PARTS
TREATMENT	SEE PARTS
FINISH	SEE PARTS

WELDING SYMBOLS TO BS 499

DRAWN	P.SUTCLIFFE
DATE	25-Sep-98
CHECKED	P.SUTCLIFFE
APPROVED	P.SUTCLIFFE

THE UNIVERSITY OF LIVERPOOL
DEPARTMENT OF PHYSICS

PROJECT: ATLAS FORWARD TRACKER

TITLE: INNER MODULE, BeO/AlN/TPG VERS.

DRAWING NUMBER: NP27-03-121

ARRGT. DRAWING: NP27-03-90

SHEET 3 OF 3 SHEETS SCALE:-2:1 A1