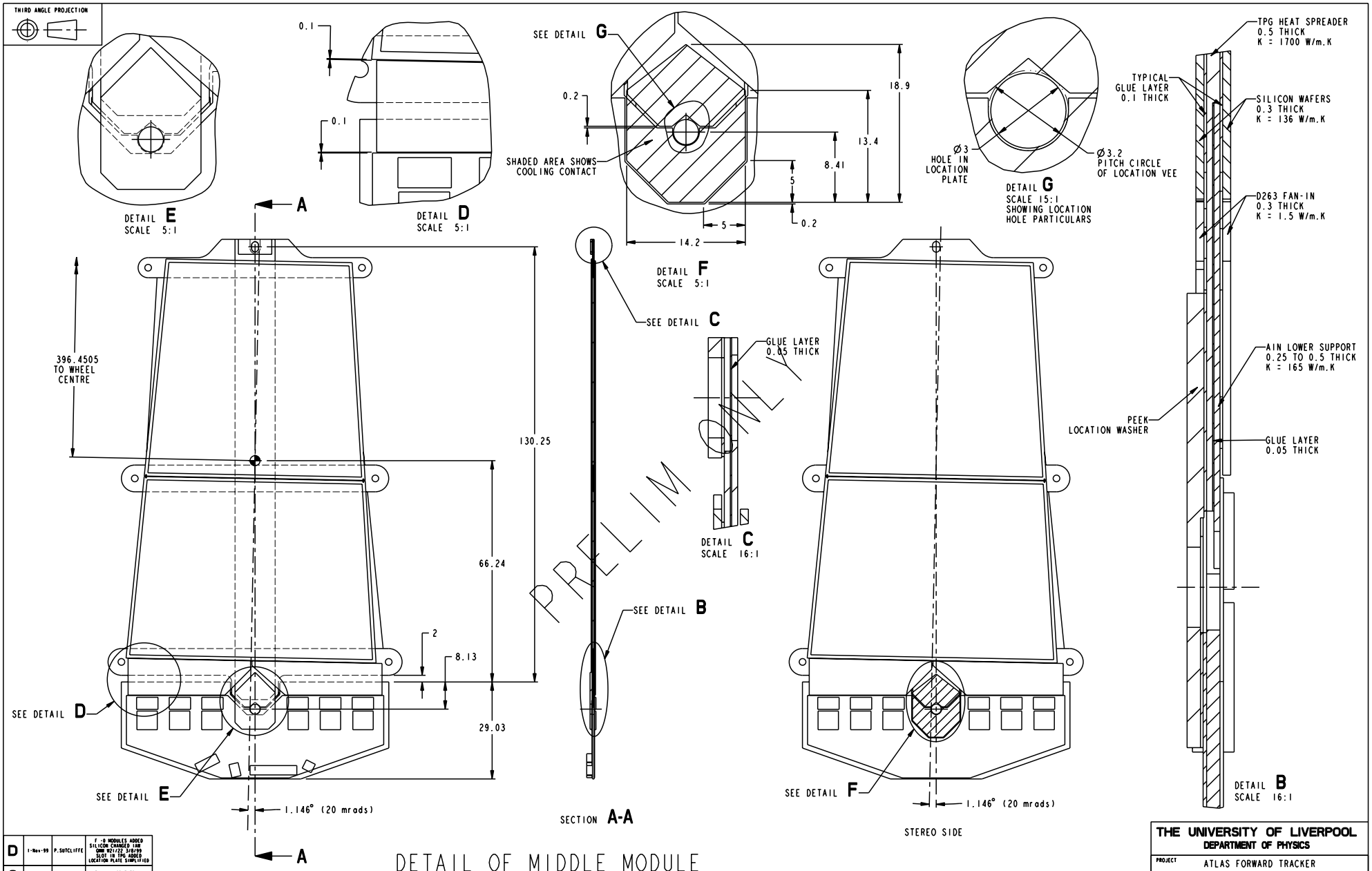

DETAIL OF MIDDLE MODULE
40 OFF PER RING
F -1 & F -0 PROTOTYPE MODULES ONLY

ISSUE	DATE	NAME	DESCRIPTION
D	1-Nov-99	P.SUTCLIFFE	F -0 MODULES ADDED SILICON CHANGED IAW QMW W21/22 3/8/99 SLOT IN TPG ADDED LOCATION PLATE SIMPLIFIED
C	30-Oct-98	P.SUTCLIFFE	FAN-IN MODIFIED IN ACCORDANCE WITH SPEC.
B	27-Oct-98	P.SUTCLIFFE	HYBRID CHANGED IN LINE WITH ELECTRONIC DESIGN. LOCATION VEE CLARIFIED
A	24-Sep-98	P.SUTCLIFFE	FIRST ISSUE

MODIFICATIONS

UNLESS OTHERWISE SPECIFIED:-
ALL DIMENSIONS IN MILLIMETRES
SURFACE TEXTURE VALUES IN MICROMETRES
SURFACE TEXTURE TO BE ✓
MACHINE ALL OVER OR WHERE MARKED ✓
REMOVE BURRS AND BREAK SHARP EDGES

METRIC SCREW THREADS TO BS3643 CLASS 6H/6g
TOLERANCES UNLESS OTHERWISE SPECIFIED
MACHINED DIMS. ±
ANGULAR ±
DO NOT SCALE

DRAWING PRACTICE AND TOLERANCE INTERPRETATION TO BS308

MATERIAL	SEE CHART
SPEC	SEE PARTS
TREATMENT	SEE PARTS
FINISH	SEE PARTS

WELDING SYMBOLS TO BS 499

DRAWN	P.SUTCLIFFE
DATE	24-Sep-98
CHECKED	P.SUTCLIFFE
APPROVED	P.SUTCLIFFE

THE UNIVERSITY OF LIVERPOOL
DEPARTMENT OF PHYSICS

PROJECT: ATLAS FORWARD TRACKER

TITLE: MIDDLE MODULE, BeO/AIN/TPG VERS.

DRAWING NUMBER: NP27-03-120

ARRGT. DRAWING: NP27-03-90

SHEET 1 OF 3 SHEETS SCALE:-2:1 A1

THIRD ANGLE PROJECTION

ITEM	PART/CAD No	DWG TITLE	MATERIAL	MAT SPEC	REMARK	QTY
1	NP27-03-116	HYBRID BASE ASSEMBLY - TPG/BeO	SEE PARTS	SEE PARTS	-	1
2	NP27-03-120-01	MIDDLE SILICON WAFERS	SILICON	-	0.3mm THICK	2
3	NP27-03-120-02	STEREO/PHI FAN-IN	BOROSILICATE GLASS	D263	0.3mm THICK	2
4	NP27-03-120-03	LOWER SUPPORT	AIN	-	0.5mm THICK	1
5	NP27-03-120-04	UPPER SUPPORT	AIN	-	0.5mm THICK	1
6	NP27-03-120-05	LOCATION PAD-OUTER MODULE	PEEK	-	-	1
7	NP27-03-120-06	CENTRE SUPPORT	AIN	-	0.5mm THICK	1
8	NP27-03-120-07	OUTER LOCATOR	BeO	-	0.5 THICK	1
9	NP27-03-120-08	SUPPORT CRUCIFIX	TPG	SEE NOTE	0.5mm THICK	1
10	NP27-03-120-GLUE	GLUE LAYERS	?	?	0.1mm OR 0.05mm thick	1

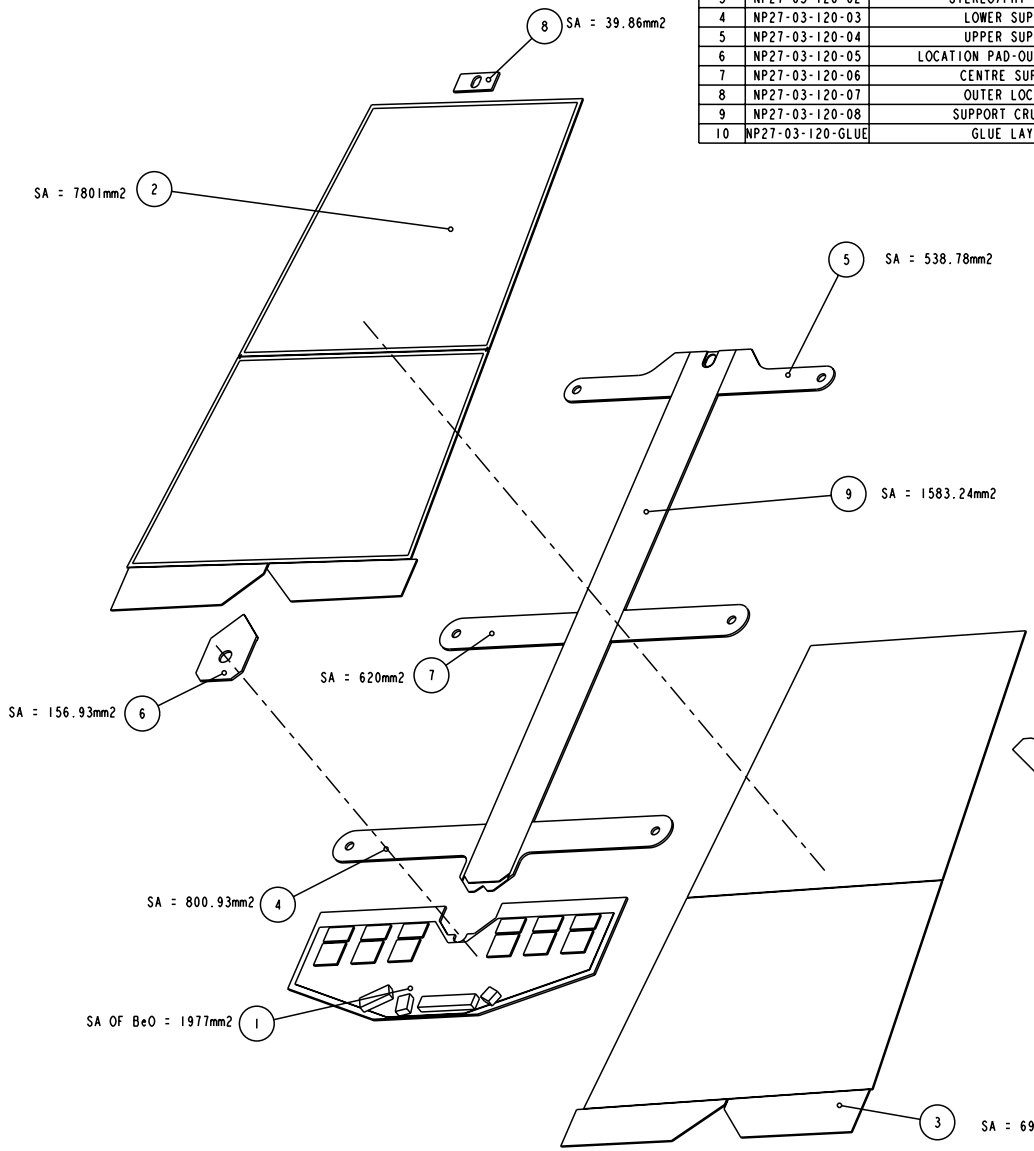

TPG (THERMAL PYROLYTIC GRAPHITE) TO BE
MOSAIC SPREAD 5 TO 10% (1700 W/m.k)
COAT WITH 0.02 POLYIMIDE AFTER SHAPE HAS BEEN CUT.

PRELIM ONLY

ISSUE	DATE	NAME	DESCRIPTION
D	1-Nov-99	P.SUTCLIFFE	F.O MODULES ADDED SILICON CHANGED 1AR GMD W21/22 3/8/99 SLOT IN TPG ADDED LOCATION PLATE SIMPLIFIED
C	30-Oct-98	P.SUTCLIFFE	FAN-IN MODIFIED IN ACCORDANCE WITH SPEC.
B	27-Oct-98	P.SUTCLIFFE	HYBRID CHANGED IN LINE WITH ELECTRONIC DESIGN. LOCATION VEE CLARIFIED
A	24-Sep-98	P.SUTCLIFFE	FIRST ISSUE

MODIFICATIONS

UNLESS OTHERWISE SPECIFIED:-
ALL DIMENSIONS IN MILLIMETRES
SURFACE TEXTURE VALUES IN MICROMETRES
SURFACE TEXTURE TO BE ✓
MACHINE ALL OVER OR WHERE MARKED ✓
REMOVE BURRS AND BREAK SHARP EDGES

METRIC SCREW THREADS TO BS3643 CLASS 6H/6g
TOLERANCES UNLESS OTHERWISE SPECIFIED
MACHINED ±0.1mm
ANGULAR ±
DO NOT SCALE

DRAWING PRACTICE AND TOLERANCE INTERPRETATION TO BS308

MATERIAL	SEE CHART
SPEC	SEE PARTS
TREATMENT	SEE PARTS
FINISH	SEE PARTS

WELDING SYMBOLS TO BS 499

DRAWN	P.SUTCLIFFE
DATE	24-Sep-98
CHECKED	P.SUTCLIFFE
APPROVED	P.SUTCLIFFE

THE UNIVERSITY OF LIVERPOOL
DEPARTMENT OF PHYSICS

PROJECT: ATLAS FORWARD TRACKER

TITLE: MIDDLE MODULE, BeO/AIN/TPG VERS.

DRAWING NUMBER: NP27-03-120

ARRGT. DRAWING: NP27-03-90

SHEET 2 OF 3 SHEETS SCALE:-2:1 A1

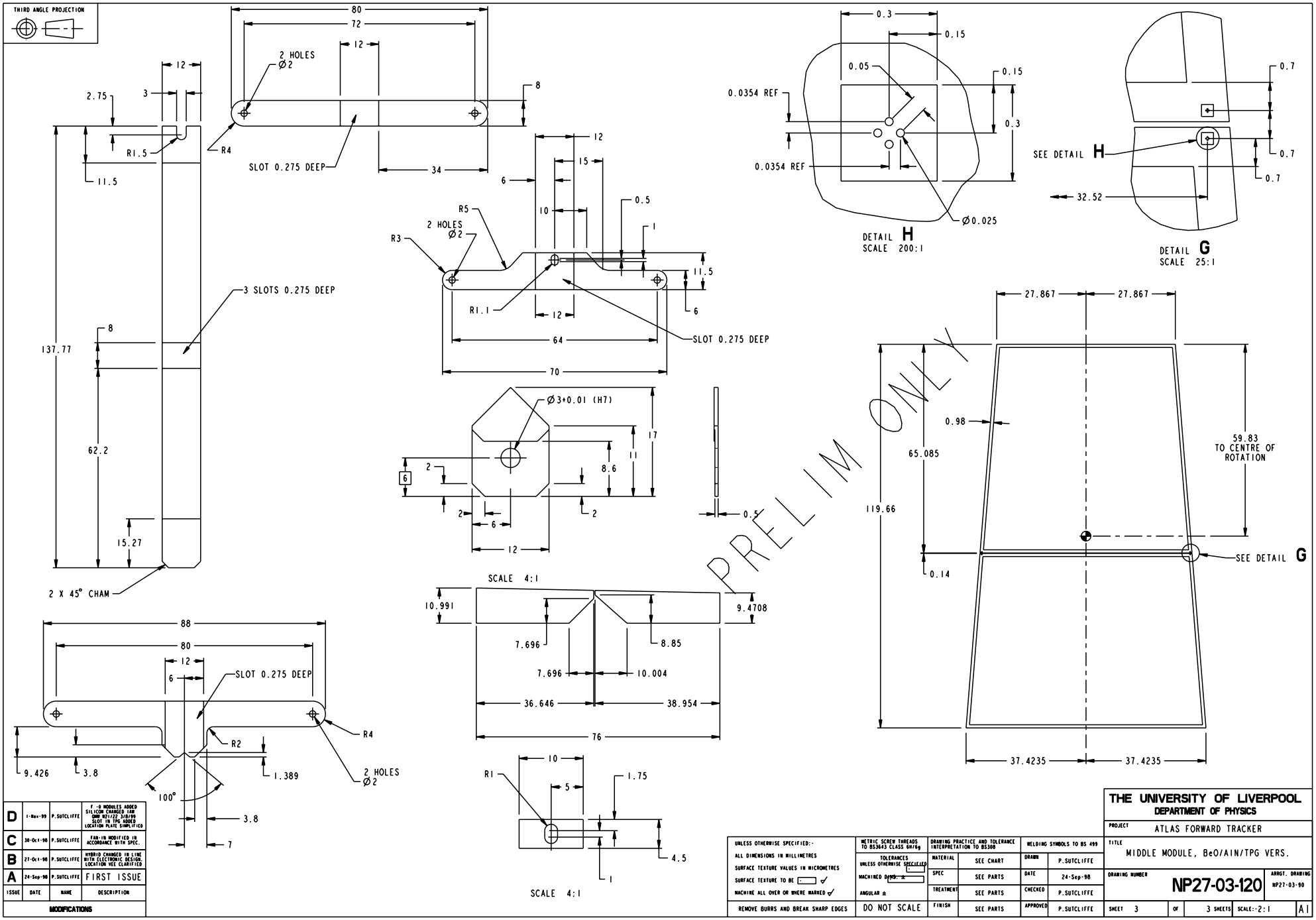

ISSUE	DATE	NAME	DESCRIPTION
D	1-Nov-99	P.SUTCLIFFE	F.O MODULES ADDED SILICON CHANGED FAR SMD W21/22 3/0/99 SLOT IN TPG ADDED LOCATION PLATE SIMPLIFIED
C	30-Oct-98	P.SUTCLIFFE	FAN-IN MODIFIED IN ACCORDANCE WITH SPEC.
B	27-Oct-98	P.SUTCLIFFE	HYBRID CHANGED IN LINE WITH ELECTRONIC DESIGN. LOCATION VEE CLARIFIED
A	24-Sep-98	P.SUTCLIFFE	FIRST ISSUE

MODIFICATIONS

UNLESS OTHERWISE SPECIFIED:-
ALL DIMENSIONS IN MILLIMETRES
SURFACE TEXTURE VALUES IN MICROMETRES
SURFACE TEXTURE TO BE ☐ ✓
MACHINE ALL OVER OR WHERE MARKED ✓
REMOVE BURRS AND BREAK SHARP EDGES

METRIC SCREW THREADS TO BS3643 CLASS 6H/6g
TOLERANCES UNLESS OTHERWISE SPECIFIED
MACHINED DIMS ±
ANGULAR ±
DO NOT SCALE

DRAWING PRACTICE AND TOLERANCE INTERPRETATION TO BS308

MATERIAL	SEE CHART
SPEC	SEE PARTS
TREATMENT	SEE PARTS
FINISH	SEE PARTS

WELDING SYMBOLS TO BS 499

DRAWN	P.SUTCLIFFE
DATE	24-Sep-98
CHECKED	P.SUTCLIFFE
APPROVED	P.SUTCLIFFE

THE UNIVERSITY OF LIVERPOOL
DEPARTMENT OF PHYSICS

PROJECT: ATLAS FORWARD TRACKER

TITLE: MIDDLE MODULE, BeO/AIN/TPG VERS.

DRAWING NUMBER: NP27-03-120

ARRGT. DRAWING: NP27-03-90

SHEET 3 OF 3 SHEETS SCALE:-2:1 A1