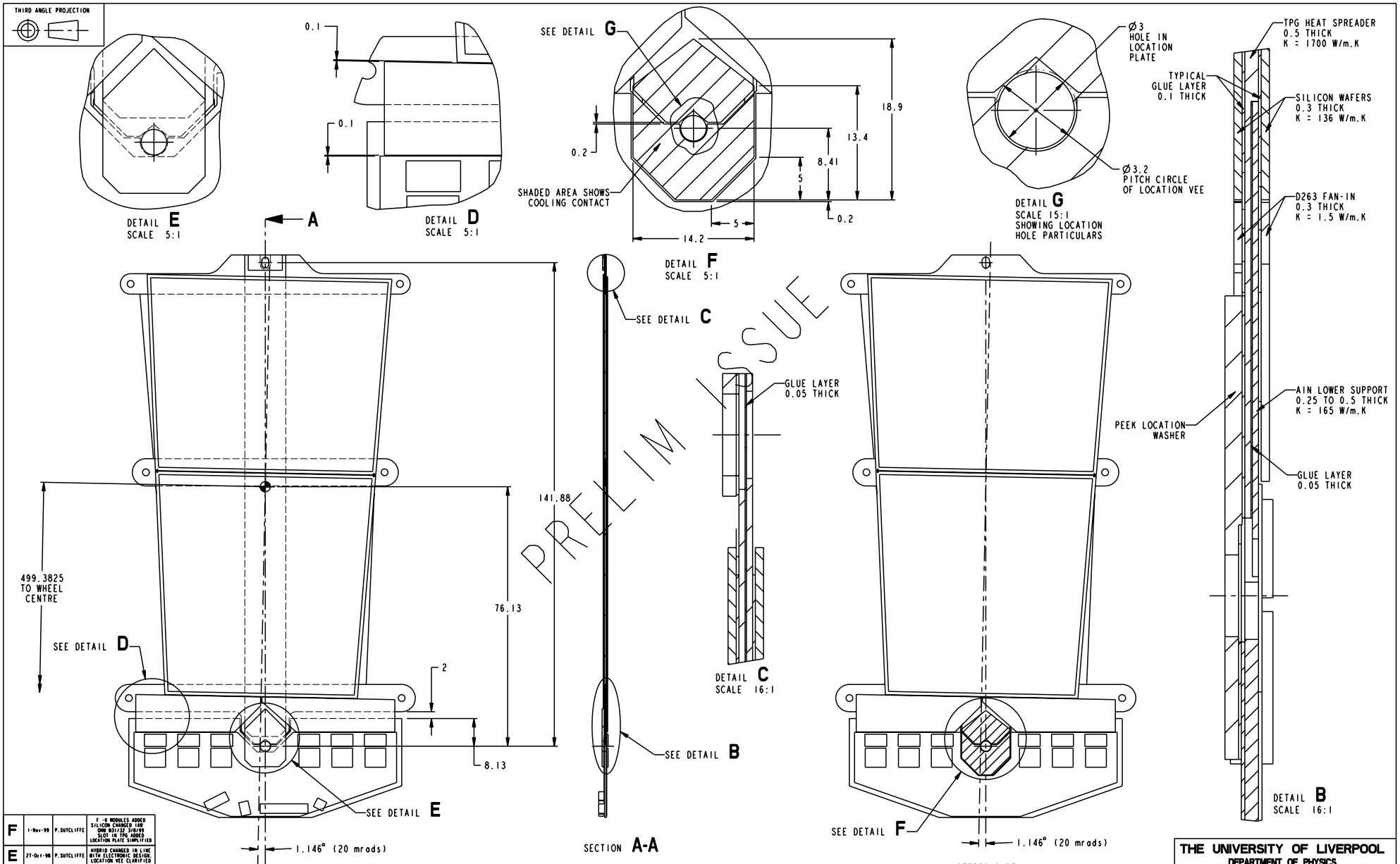

ISSUE	DATE	NAME	DESCRIPTION
F	1-Nov-99	P.SUTCLIFFE	F -0 MODULES ADDED SILICON CHANGED IAW OMW M31/32 3/8/99 SLOT IN TPG ADDED LOCATION PLATE SIMPLIFIED
E	27-Oct-98	P.SUTCLIFFE	HYBRID CHANGED IN LINE WITH ELECTRONIC DESIGN. LOCATION VEE CLARIFIED
D	13-Oct-98	P.SUTCLIFFE	TPG AND HYBRID SLIGHTLY MODIFIED
C	13-Aug-98	P.SUTCLIFFE	LOCATION VEE ADDED IN MIDDLE SUPPORT
B	12-June-98	P.SUTCLIFFE	DIMS ADDED, HYBRID MODIFIED, AIN CROSS WAS BeO
A	12-May-98	P.SUTCLIFFE	FIRST ISSUE

MODIFICATIONS

DETAIL OF OUTER MODULE
52 OFF PER RING
F -1 & F -0 PROTOTYPE MODULES ONLY

UNLESS OTHERWISE SPECIFIED:-
ALL DIMENSIONS IN MILLIMETRES
SURFACE TEXTURE VALUES IN MICROMETRES
SURFACE TEXTURE TO BE [ ] ✓
MACHINE ALL OVER OR WHERE MARKED ✓
REMOVE BURRS AND BREAK SHARP EDGES

METRIC SCREW THREADS TO BS3643 CLASS 6H/6g
TOLERANCES UNLESS OTHERWISE SPECIFIED
MACHINED DIMS. ±
ANGULAR ±
DO NOT SCALE

DRAWING PRACTICE AND TOLERANCE INTERPRETATION TO BS308

MATERIAL	SEE CHART
SPEC	SEE PARTS
TREATMENT	SEE PARTS
FINISH	SEE PARTS

WELDING SYMBOLS TO BS 499

DRAWN	P.SUTCLIFFE
DATE	12-May-98
CHECKED	P.SUTCLIFFE
APPROVED	P.SUTCLIFFE

THE UNIVERSITY OF LIVERPOOL
DEPARTMENT OF PHYSICS

PROJECT: ATLAS FORWARD TRACKER

TITLE: OUTER MODULE, BeO/AIN/TPG VERS.

DRAWING NUMBER: NP27-03-112

ARRGT. DRAWING: NP27-03-90

SHEET 1 OF 3 SHEETS SCALE:-2:1 A1

THIRD ANGLE PROJECTION

ITEM	PART/CAD No	DWG TITLE	MATERIAL	MAT SPEC	REMARK	QTY
1	NP27-03-116	HYBRID BASE ASSEMBLY - TPG/BeO	SEE PARTS	SEE PARTS	-	1
2	NP27-03-112-01	OUTER SILICON WAFERS	SILICON	-	0.3mm THICK	2
3	NP27-03-112-02	STEREO/PHI FAN-IN	BOROSILICATE GLASS	D263	0.3mm THICK	2
4	NP27-03-112-03	LOWER SUPPORT	AIN	-	0.5mm THICK	1
5	NP27-03-112-04	UPPER SUPPORT	AIN	-	0.5mm THICK	1
6	NP27-03-112-05	LOCATION PAD-OUTER MODULE	PEEK	-	-	1
7	NP27-03-112-06	CENTRE SUPPORT	AIN	-	0.5mm THICK	1
8	NP27-03-112-08	OUTER LOCATOR	PEEK	-	0.5 THICK	1
9	NP27-03-112-09	MIDDLE SUPPORT CRUCIFIX	TPG	SEE NOTE	0.5mm THICK	1
10	NP27-03-112-GLUE	GLUE LAYERS	?	?	0.1mm OR 0.05mm THICK	1

TPG (THERMAL PYROLYTIC GRAPHITE) TO BE
MOSAIC SPREAD 5 TO 10% (1700 W/m.k)
COAT WITH 0.02 POLYIMIDE AFTER SHAPE HAS BEEN CUT.

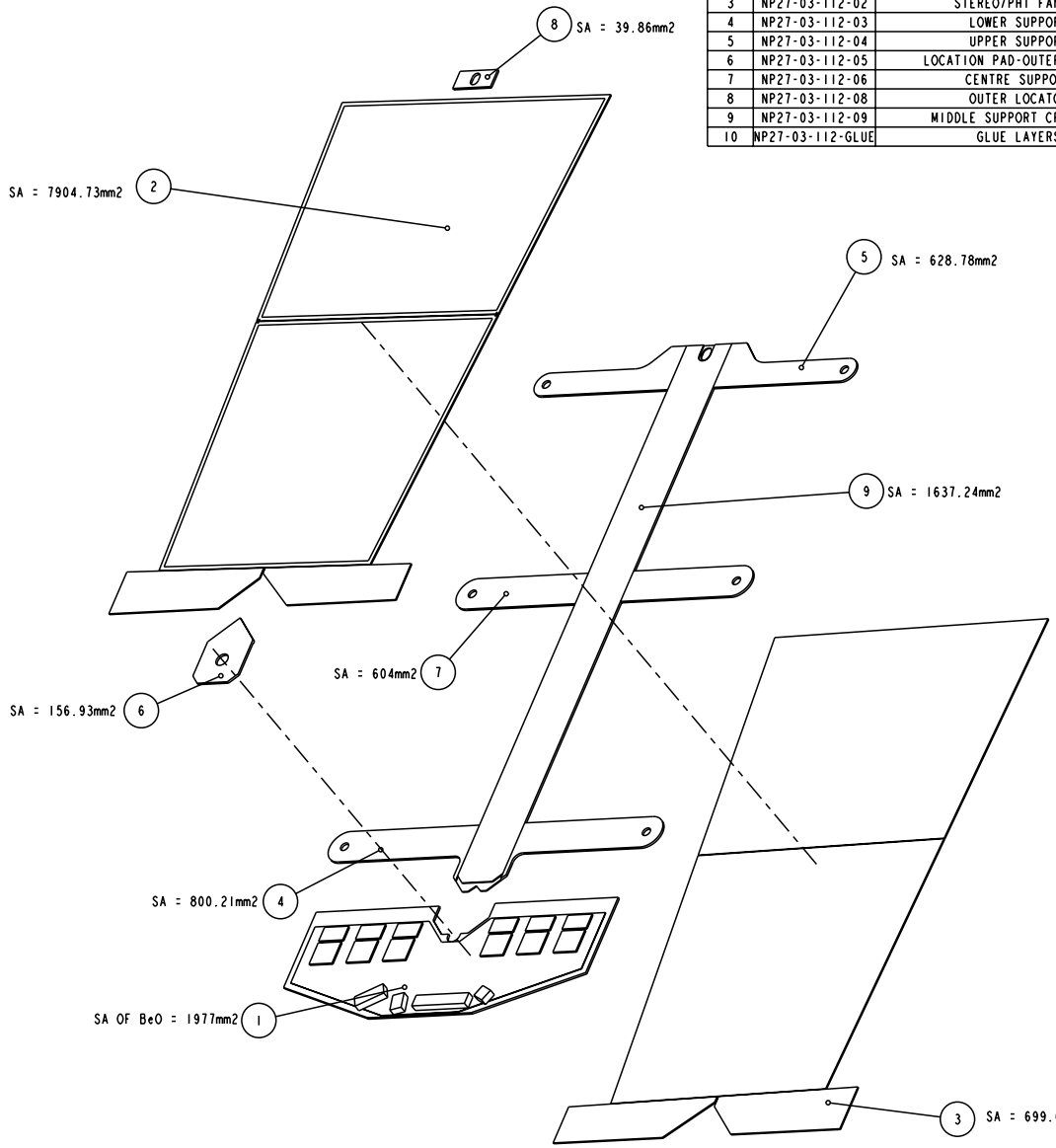

PRELIM ISSUE

ISSUE	DATE	NAME	DESCRIPTION
F	1-Nov-99	P.SUTCLIFFE	F -0 MODULES ADDED SILICON CHANGED IAW QMM M31/32 3/8/99 SLOT IN TPG ADDED LOCATION PLATE SIMPLIFIED
E	27-Oct-98	P.SUTCLIFFE	HYBRID CHANGED IN LINE WITH ELECTRONIC DESIGN. LOCATION VEE CLARIFIED
D	13-Oct-98	P.SUTCLIFFE	TPG AND HYBRID SLIGHTLY MODIFIED
C	13-Aug-98	P.SUTCLIFFE	LOCATION VEE ADDED IN MIDDLE SUPPORT
B	12-June-98	P.SUTCLIFFE	DIMS ADDED, HYBRID MODIFIED, AIN CROSS WAS BeO
A	12-May-98	P.SUTCLIFFE	FIRST ISSUE

MODIFICATIONS

UNLESS OTHERWISE SPECIFIED:-
ALL DIMENSIONS IN MILLIMETRES
SURFACE TEXTURE VALUES IN MICROMETRES
SURFACE TEXTURE TO BE [ ] ✓
MACHINE ALL OVER OR WHERE MARKED ✓

REMOVE BURRS AND BREAK SHARP EDGES

METRIC SCREW THREADS TO BS3643 CLASS 6H/6g

TOLERANCES UNLESS OTHERWISE SPECIFIED [ ]
MACHINED DIMS. ±
ANGULAR ±

DO NOT SCALE

DRAWING PRACTICE AND TOLERANCE INTERPRETATION TO BS308

MATERIAL	SEE CHART
SPEC	SEE PARTS
TREATMENT	SEE PARTS
FINISH	SEE PARTS

WELDING SYMBOLS TO BS 499

DRAWN	P.SUTCLIFFE
DATE	12-May-98
CHECKED	P.SUTCLIFFE
APPROVED	P.SUTCLIFFE

THE UNIVERSITY OF LIVERPOOL
DEPARTMENT OF PHYSICS

PROJECT: ATLAS FORWARD TRACKER

TITLE: OUTER MODULE, BeO/AIN/TPG VERS.

DRAWING NUMBER: NP27-03-112

ARRGT. DRAWING: NP27-03-90

SHEET 2 OF 3 SHEETS SCALE:-2:1 A1

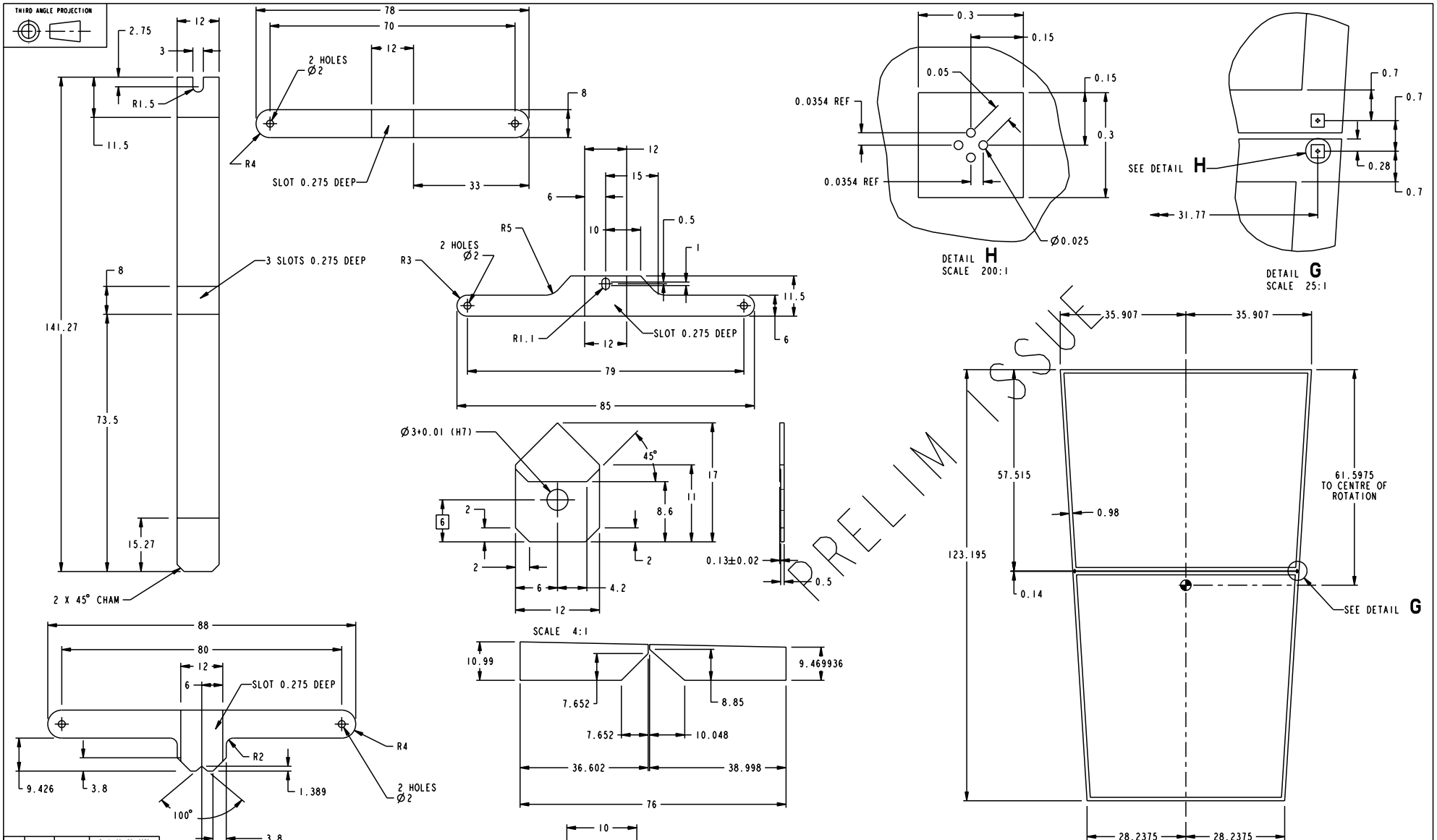

ISSUE	DATE	NAME	DESCRIPTION
F	1-Nov-99	P.SUTCLIFFE	F -0 MODULES ADDED SILICON CHANGED 1AB QMW W31/32 3/8/99 SLOT IN TPG ADDED LOCATION PLATE SIMPLIFIED
E	27-Oct-98	P.SUTCLIFFE	HYBRID CHANGED IN LINE WITH ELECTRONIC DESIGN. LOCATION VEE CLARIFIED
D	13-Oct-98	P.SUTCLIFFE	TPG AND HYBRID SLIGHTLY MODIFIED
C	13-Aug-98	P.SUTCLIFFE	LOCATION VEE ADDED IN MIDDLE SUPPORT
B	12-June-98	P.SUTCLIFFE	DIMS ADDED, HYBRID MODIFIED, AlN CROSS WAS BeO
A	12-May-98	P.SUTCLIFFE	FIRST ISSUE

MODIFICATIONS

UNLESS OTHERWISE SPECIFIED:-
ALL DIMENSIONS IN MILLIMETRES
SURFACE TEXTURE VALUES IN MICROMETRES
SURFACE TEXTURE TO BE ✓
MACHINE ALL OVER OR WHERE MARKED ✓

REMOVE BURRS AND BREAK SHARP EDGES

METRIC SCREW THREADS TO BS3643 CLASS 6H/6g
TOLERANCES UNLESS OTHERWISE SPECIFIED
MACHINED DIMS. ±
ANGULAR ±

DO NOT SCALE

DRAWING PRACTICE AND TOLERANCE INTERPRETATION TO BS308

MATERIAL	SEE CHART
SPEC	SEE PARTS
TREATMENT	SEE PARTS
FINISH	SEE PARTS

WELDING SYMBOLS TO BS 499

DRAWN	P.SUTCLIFFE
DATE	12-May-98
CHECKED	P.SUTCLIFFE
APPROVED	P.SUTCLIFFE

THE UNIVERSITY OF LIVERPOOL
DEPARTMENT OF PHYSICS

PROJECT: ATLAS FORWARD TRACKER

TITLE: OUTER MODULE, BeO/AlN/TPG VERS.

DRAWING NUMBER: NP27-03-112

ARRGT. DRAWING: NP27-03-90

SHEET 3 OF 3 SHEETS SCALE:-2:1 A1